Cambridge Assessment International Education

Cambridge International AS & A Level

CANDIDATE NAME

CENTRE NUMBER

CANDIDATE NUMBER

0754472607

PHYSICS **9702/21**

Paper 2 AS Level Structured Questions **May/June 2025**

1 hour 15 minutes

You must answer on the question paper.

No additional materials are needed.

INSTRUCTIONS

- Answer **all** questions.
- Use a black or dark blue pen. You may use an HB pencil for any diagrams or graphs.
- Write your name, centre number and candidate number in the boxes at the top of the page.
- Write your answer to each question in the space provided.
- Do **not** use an erasable pen or correction fluid.
- Do **not** write on any bar codes.
- You may use a calculator.
- You should show all your working and use appropriate units.

INFORMATION

- The total mark for this paper is 60.
- The number of marks for each question or part question is shown in brackets [ ].

This document has **16** pages. Any blank pages are indicated.

© UCLES 2025

[Turn over

Data

acceleration of free fall	g	=	$9.81\ \text{m s}^{-2}$
speed of light in free space	c	=	$3.00 \times 10^{8}\ \text{m s}^{-1}$
elementary charge	e	=	$1.60 \times 10^{-19}\ \text{C}$
unified atomic mass unit	1 u	=	$1.66 \times 10^{-27}\ \text{kg}$
rest mass of proton	m_p	=	$1.67 \times 10^{-27}\ \text{kg}$
rest mass of electron	m_e	=	$9.11 \times 10^{-31}\ \text{kg}$
Avogadro constant	N_A	=	$6.02 \times 10^{23}\ \text{mol}^{-1}$
molar gas constant	R	=	$8.31\ \text{J K}^{-1}\ \text{mol}^{-1}$
Boltzmann constant	k	=	$1.38 \times 10^{-23}\ \text{J K}^{-1}$
gravitational constant	G	=	$6.67 \times 10^{-11}\ \text{N m}^2\ \text{kg}^{-2}$
permittivity of free space	ε_0	=	$8.85 \times 10^{-12}\ \text{F m}^{-1}$
	$\left(\frac{1}{4\pi\varepsilon_0}\right.$	=	$\left.8.99 \times 10^{9}\ \text{m F}^{-1}\right)$
Planck constant	h	=	$6.63 \times 10^{-34}\ \text{J s}$
Stefan–Boltzmann constant	σ	=	$5.67 \times 10^{-8}\ \text{W m}^{-2}\ \text{K}^{-4}$

Formulae

uniformly accelerated motion	s	=	$ut + \frac{1}{2}at^2$
	v^2	=	$u^2 + 2as$
hydrostatic pressure	Δp	=	$\rho g \Delta h$
upthrust	F	=	$\rho g V$
Doppler effect for sound waves	f_o	=	$\frac{f_\text{s} v}{v \pm v_\text{s}}$
electric current	I	=	$Anvq$
resistors in series	R	=	$R_1 + R_2 + \ldots$
resistors in parallel	$\frac{1}{R}$	=	$\frac{1}{R_1} + \frac{1}{R_2} + \ldots$

DO NOT WRITE IN THIS MARGIN
DO NOT WRITE IN THIS MARGIN
DO NOT WRITE IN THIS MARGIN
DO NOT WRITE IN THIS MARGIN
DO NOT WRITE IN THIS MARGIN

BLANK PAGE

DO NOT WRITE IN THIS MARGIN
DO NOT WRITE IN THIS MARGIN
DO NOT WRITE IN THIS MARGIN
DO NOT WRITE IN THIS MARGIN
DO NOT WRITE IN THIS MARGIN

1 **(a)** Define acceleration.

.....

..... [1]

(b) In an experiment, two objects A and B are released from the side of a building, as shown in Fig. 1.1.

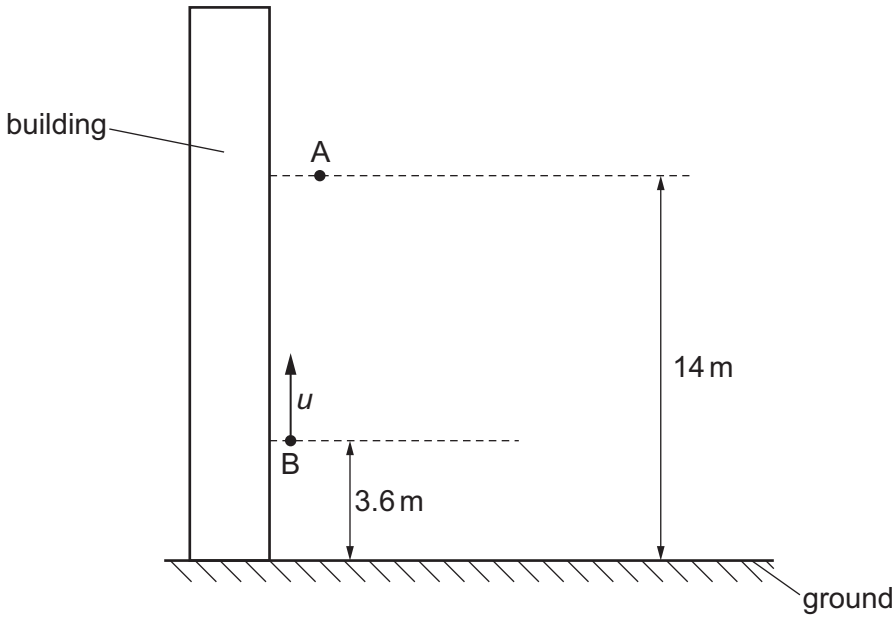

Fig. 1.1 (not to scale)

Object A is released from rest at a height of 14 m above the horizontal ground.
Object B is released with an initial upwards vertical velocity u at a height of 3.6 m above the ground.
Both objects take the same time to reach the ground and they do not collide with each other.
Air resistance is negligible.

(i) Calculate the time taken for object A to reach the ground.

time = ... s [2]

(ii) Use your answer in **(b)(i)** to calculate u.

u = ... $m\,s^{-1}$ [2]

DO NOT WRITE IN THIS MARGIN
DO NOT WRITE IN THIS MARGIN
DO NOT WRITE IN THIS MARGIN
DO NOT WRITE IN THIS MARGIN
DO NOT WRITE IN THIS MARGIN

DO NOT WRITE IN THIS MARGIN
DO NOT WRITE IN THIS MARGIN
DO NOT WRITE IN THIS MARGIN
DO NOT WRITE IN THIS MARGIN
DO NOT WRITE IN THIS MARGIN

(c) In a second experiment, object B is released from the same height and given the same initial speed as in **(b)** but at a release angle θ to the vertical, as shown in Fig. 1.2.

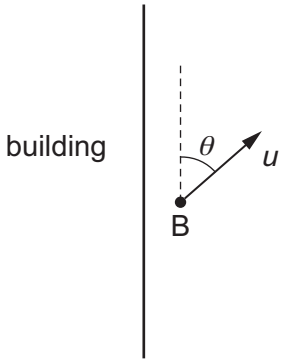

Fig. 1.2

(i) State and explain whether the time taken for object B to reach the ground is less than, the same as or greater than the time in **(b)(i)**.

.....

.....

..... [2]

(ii) By considering energy, state and explain the effect of the change in release angle on the speed at which B reaches the ground.

.....

.....

..... [2]

[Total: 9]

2 **(a)** State the principle of moments.

.....

.....

..... [2]

(b) Three objects A, B and C are placed on a horizontal beam. The beam is in equilibrium, as shown in Fig. 2.1.

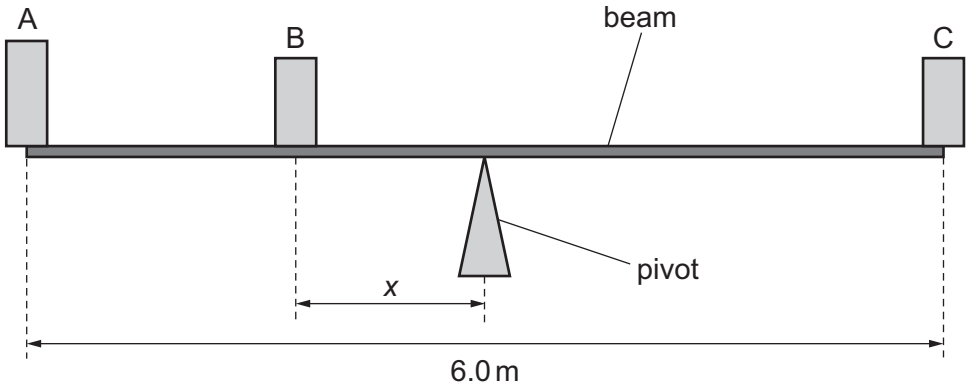

Fig. 2.1 (not to scale)

The beam is uniform and has length 6.0 m.
The pivot is at the midpoint of the beam.
Object A has mass 60 kg and is at one end of the beam.
Object B has mass 45 kg and is at a distance *x* from the pivot.
Object C has mass 80 kg and is at the other end of the beam.

Calculate *x*.

x = ... m [3]

DO NOT WRITE IN THIS MARGIN
DO NOT WRITE IN THIS MARGIN
DO NOT WRITE IN THIS MARGIN
DO NOT WRITE IN THIS MARGIN
DO NOT WRITE IN THIS MARGIN

(c) The beam is 0.80 m above horizontal ground.

Object A is removed and replaced by a spring connected to the ground and the beam, as shown in Fig. 2.2.

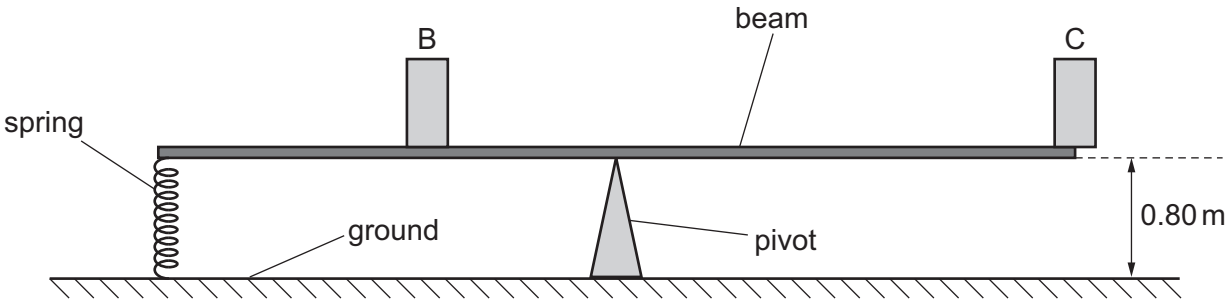

Fig. 2.2

After the change, the beam is again horizontal and in equilibrium. The positions of B and C are unchanged.

The spring has an unstretched length of 0.59 m and obeys Hooke's law.

(i) Calculate the spring constant of the spring.

spring constant = ... $N\,m^{-1}$ [3]

(ii) Calculate the elastic potential energy of the spring.

elastic potential energy = ... J [2]

[Total: 10]

DO NOT WRITE IN THIS MARGIN
DO NOT WRITE IN THIS MARGIN
DO NOT WRITE IN THIS MARGIN
DO NOT WRITE IN THIS MARGIN
DO NOT WRITE IN THIS MARGIN

3 **(a)** Define power.

.....

..... [1]

(b) An electric car is powered by a motor. The car is travelling at a constant speed of $35\,m\,s^{-1}$ along a straight horizontal road, as shown in Fig. 3.1.

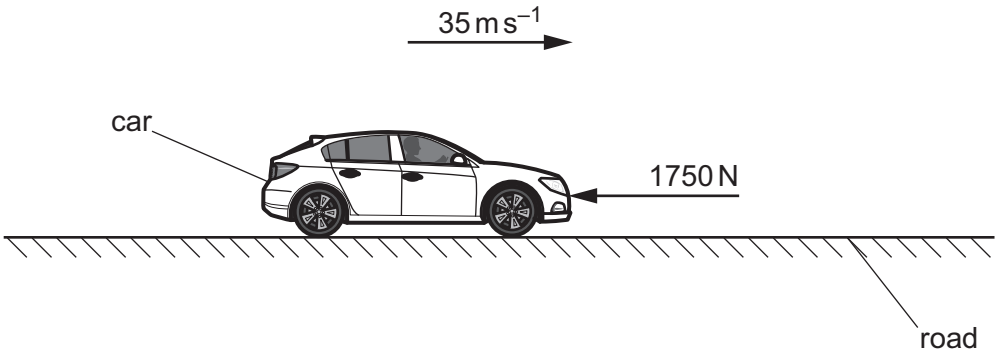

Fig. 3.1

There is a total resistive force of 1750 N acting on the car.

(i) Calculate the power transmitted to the wheels of the car by the motor.

power = ...W [2]

(ii) Calculate the useful work done by the motor when the car travels a distance of 17 km.

work done = ... J [2]

DO NOT WRITE IN THIS MARGIN

(iii) The potential difference (p.d.) across the motor has a constant value of 600 V and the motor has an efficiency of 85%.

Calculate the current in the motor.

current = ...A [3]

(c) The car in **(b)** now reaches a slope, as shown in Fig. 3.2.

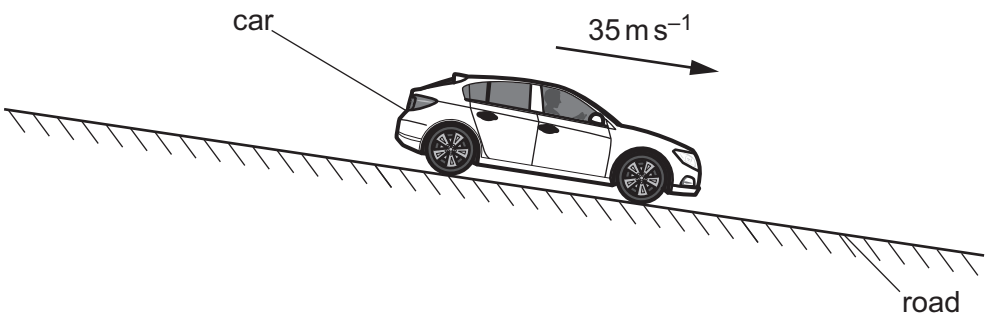

Fig. 3.2

The car continues down the slope at the same speed as in **(b)**.

State and explain the effect, if any, of the slope on:

(i) the air resistance acting on the car

.....

..... [1]

(ii) the current in the motor.

.....

..... [1]

[Total: 10]

DO NOT WRITE IN THIS MARGIN

4 **(a)** State the principle of superposition.

.....

.....

..... [2]

(b) Light of wavelength 7.2×10^{-7} m is incident normally on a double slit, as shown in Fig. 4.1.

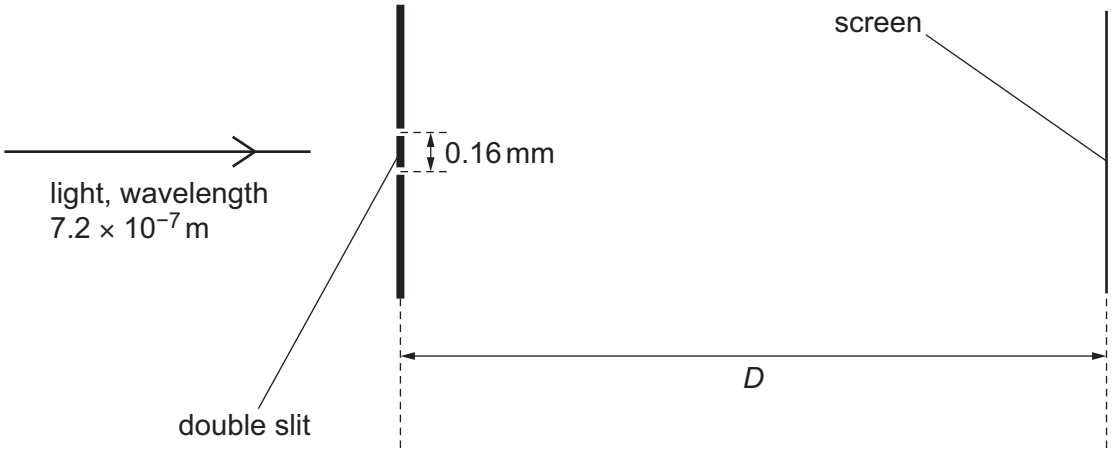

Fig. 4.1 (not to scale)

A screen is at a distance *D* from the double slit. The double slit and the screen are parallel.

The separation of the slits in the double-slit arrangement is 0.16 mm. The resulting interference pattern on the screen contains nine dark fringes, as shown in Fig. 4.2.

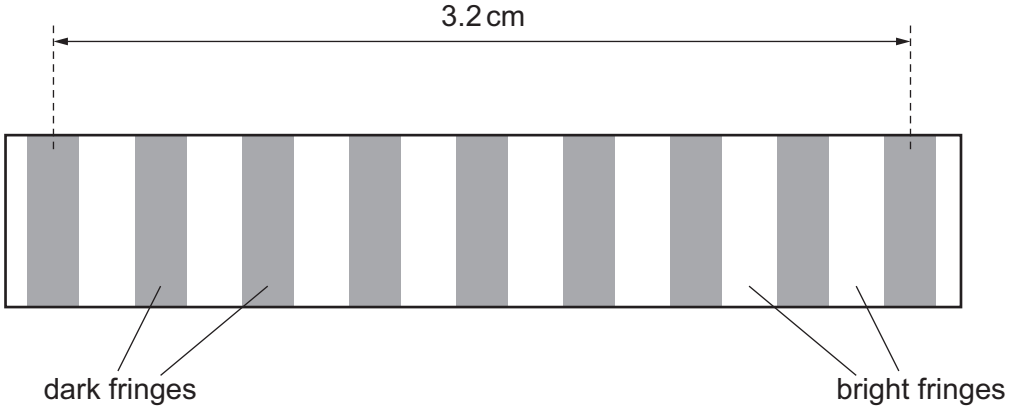

Fig. 4.2 (not to scale)

DO NOT WRITE IN THIS MARGIN

The distance between the centres of the first and ninth dark fringes is 3.2 cm.

(i) Calculate D.

D = ... m [3]

(ii) The slit separation is now gradually decreased from 0.16 mm to 0.04 mm. The distance between the centres of adjacent dark fringes is x.

On Fig. 4.3, sketch the variation of x with slit separation.

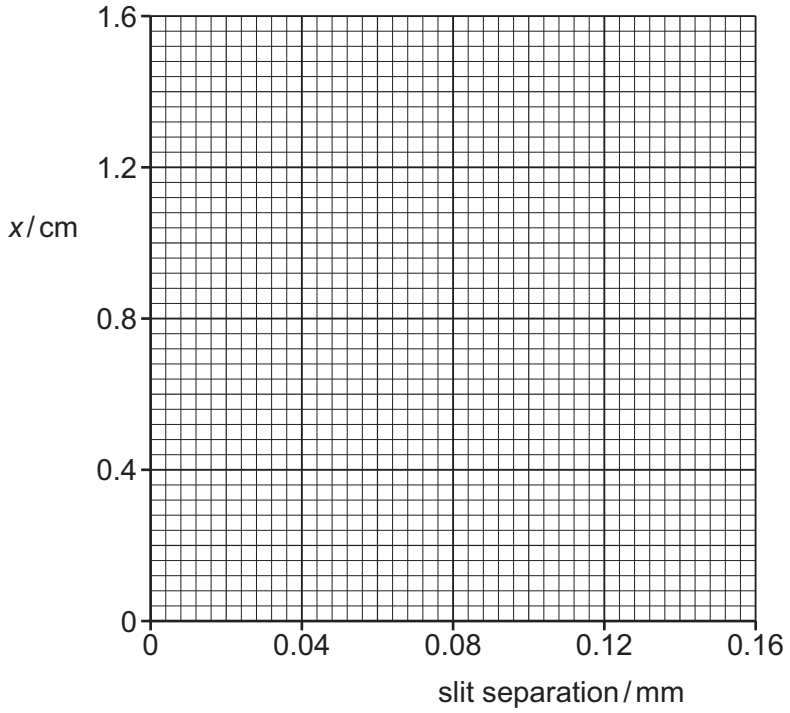

Fig. 4.3

[3]

[Total: 8]

DO NOT WRITE IN THIS MARGIN
DO NOT WRITE IN THIS MARGIN
DO NOT WRITE IN THIS MARGIN
DO NOT WRITE IN THIS MARGIN
DO NOT WRITE IN THIS MARGIN

5 **(a)** Use the definitions of speed v, frequency f and wavelength λ to derive the wave equation

$$v = f\lambda.$$

[2]

(b) A source of sound waves of frequency 236 Hz is travelling at a constant velocity of $20\,\text{m}\,\text{s}^{-1}$.

A stationary observer has a microphone connected to a cathode-ray oscilloscope (CRO). The microphone detects the sound waves as the source moves directly towards the observer.

The resulting trace on the CRO is shown in Fig. 5.1.

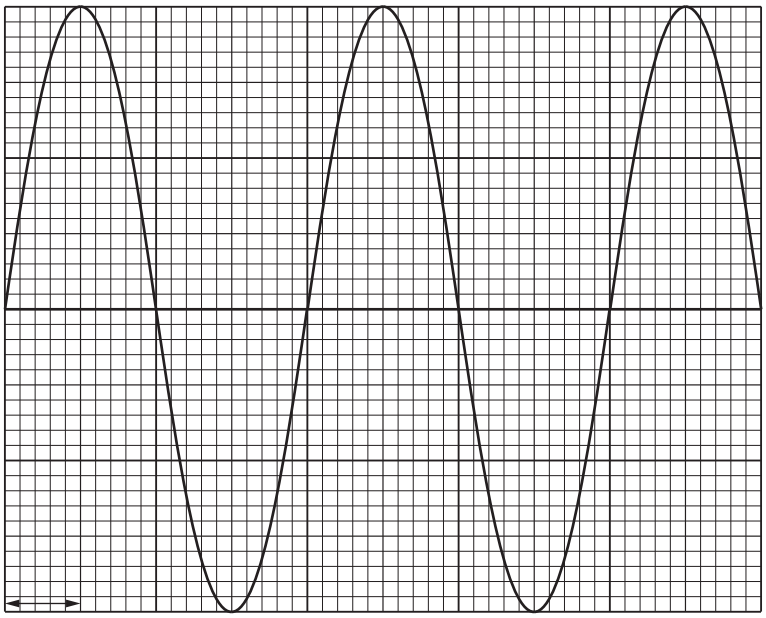

Fig. 5.1

The time-base on the CRO is set to $1.0\,\text{ms}\,\text{div}^{-1}$.

DO NOT WRITE IN THIS MARGIN
DO NOT WRITE IN THIS MARGIN
DO NOT WRITE IN THIS MARGIN
DO NOT WRITE IN THIS MARGIN
DO NOT WRITE IN THIS MARGIN

(i) Calculate the frequency of the sound waves detected by the microphone.

frequency = ... Hz [2]

(ii) Determine the speed of the sound in air.

speed of sound = ... $m\,s^{-1}$ [2]

[Total: 6]

DO NOT WRITE IN THIS MARGIN
DO NOT WRITE IN THIS MARGIN
DO NOT WRITE IN THIS MARGIN
DO NOT WRITE IN THIS MARGIN
DO NOT WRITE IN THIS MARGIN

6 A nichrome wire X of length 45 cm and cross-sectional area $4.7 \times 10^{-7}\,m^2$ is connected into the circuit shown in Fig. 6.1.

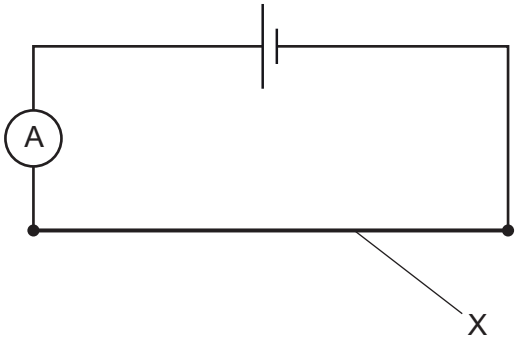

Fig. 6.1

The resistance of X is 1.1 Ω. The cell has electromotive force (e.m.f.) 1.3 V and negligible internal resistance.

(a) (i) Calculate the current in X.

current = ...A [1]

(ii) The number density of charge carriers (electrons) in nichrome is $8.5 \times 10^{28}\,m^{-3}$.

Calculate the average drift speed of the charge carriers in X.

average drift speed = ... $m\,s^{-1}$ [2]

(iii) Calculate the resistivity of the nichrome.

resistivity = ... Ω m [3]

DO NOT WRITE IN THIS MARGIN
DO NOT WRITE IN THIS MARGIN
DO NOT WRITE IN THIS MARGIN
DO NOT WRITE IN THIS MARGIN
DO NOT WRITE IN THIS MARGIN

(b) Wire Y is identical to wire X. Wire Y is added to the circuit in parallel with wire X, as shown in Fig. 6.2.

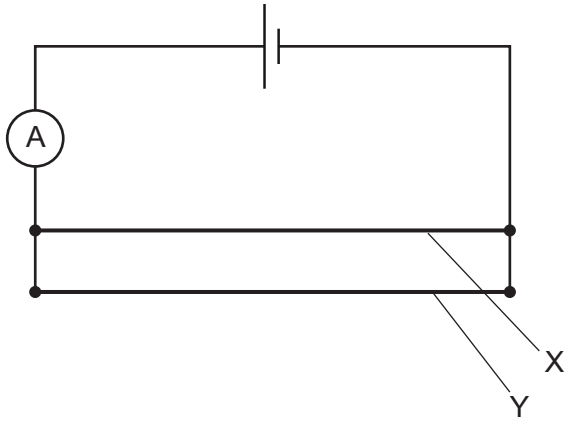

Fig. 6.2

State and explain the effect, if any, of this change on:

(i) the reading on the ammeter

.....

.....

..... [2]

(ii) the average drift speed of the charge carriers in X.

.....

..... [1]

[Total: 9]

DO NOT WRITE IN THIS MARGIN

7 **(a)** Nitrogen-12 ($^{12}_{7}N$) is an unstable isotope of nitrogen that decays by the emission of radiation to carbon-12 ($^{12}_{6}C$).

Complete the full nuclear equation for the decay, including all the particles involved.

$^{12}_{7}N \rightarrow$

[3]

(b) Hydrogen-1 ($^{1}_{1}H$) is an isotope of hydrogen. An atom of hydrogen-1 comprises a proton with an orbiting electron.

An antiparticle equivalent of hydrogen-1 comprises an antiproton with an orbiting positron. The antiquarks in the antiproton are the antiparticles of the quarks in a proton.

(i) State the charge on the positron in terms of the elementary charge *e*.

charge = ... *e* [1]

(ii) State the group (class) of fundamental particle to which the positron belongs.

..... [1]

(iii) In Table 7.1, state the flavour and charge of the three antiquarks that comprise the antiproton.

Table 7.1

flavour	charge / *e*

[3]

[Total: 8]

Permission to reproduce items where third-party owned material protected by copyright is included has been sought and cleared where possible. Every reasonable effort has been made by the publisher (UCLES) to trace copyright holders, but if any items requiring clearance have unwittingly been included, the publisher will be pleased to make amends at the earliest possible opportunity.

To avoid the issue of disclosure of answer-related information to candidates, all copyright acknowledgements are reproduced online in the Cambridge Assessment International Education Copyright Acknowledgements Booklet. This is produced for each series of examinations and is freely available to download at www.cambridgeinternational.org after the live examination series.

Cambridge Assessment International Education is part of Cambridge Assessment. Cambridge Assessment is the brand name of the University of Cambridge Local Examinations Syndicate (UCLES), which is a department of the University of Cambridge.

© UCLES 2025

DO NOT WRITE IN THIS MARGIN DO NOT WRITE IN THIS MARGIN DO NOT WRITE IN THIS MARGIN DO NOT WRITE IN THIS MARGIN DO NOT WRITE IN THIS MARGIN